EBARA

CP1103EB

HORIZONTAL DOUBLE SUCTION VOLUTE PUMPS

Model **CN BORE600～1000mm(24～40in)**

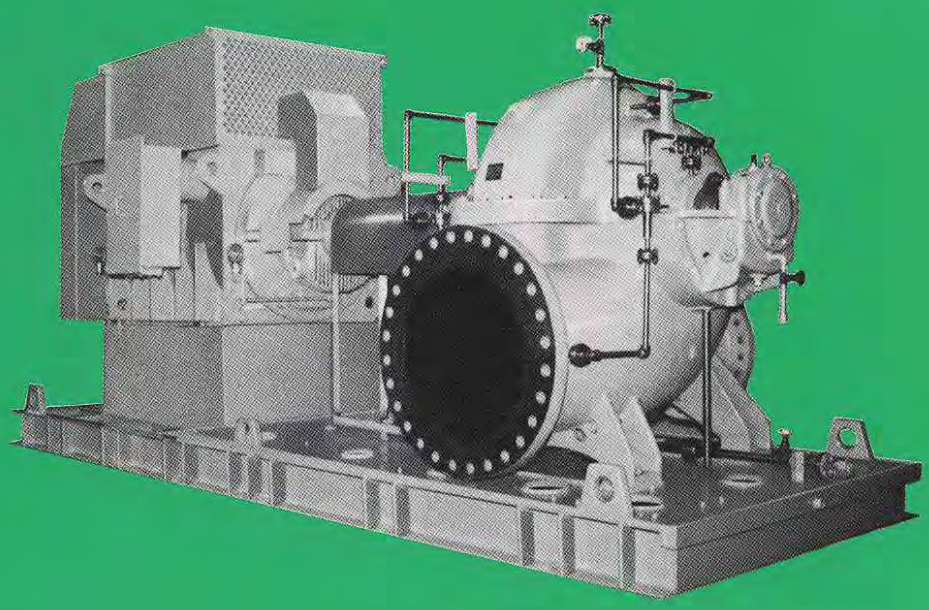

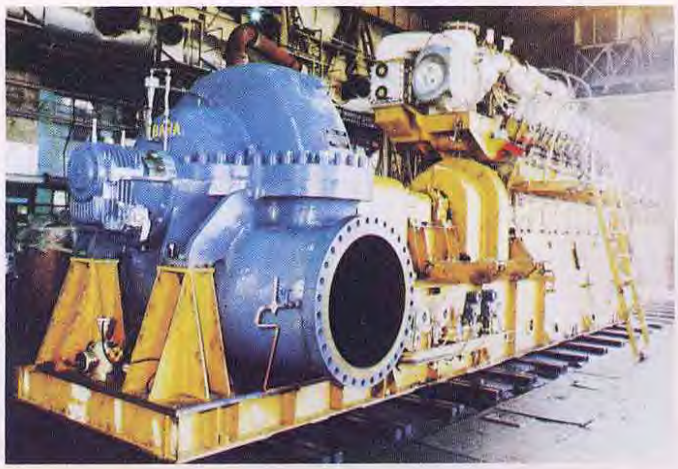

FEATURES

1 Split case design permits easy disassembly, that is, inspection is simplified, it is not necessary to disturb pump alignment and suction & discharge piping when parts replacement is necessary.

2 Double suction with advanced design of suction performance ensures high suction lifts even with large capacities. Compared with conventional double suction design, with the possibility of using a high speed motor, such system and related facilities can be installed in a small area.

3 High operating efficiency over a wider range of capacities reduce operation cost and smaller motor output are all possible.

4 Pump operation with low noise, smaller pressure pulsation ensure comfortable environment.

5 Variable combinations of materials permit wide application.

APPLICATIONS

- Water works — Water intake/water supply/booster
- Industrial use — Water intake/water supply/booster/water circulation/drainage/sea water desalination/chemical/refinery/fire fighting
- Irrigation — Water supply/drainage
- Building — Water supply/drainage/air conditioning
- Pipe line — Water & crude oil transfer/booster

APPLICATION RANGE

Capacity : Approx. 35∿250 m^3/min (9200∿66000 USGPM)
Total head : Approx. 7∿190 m (23∿620 ft)

Liquid: Fresh water/industries/river water/sea water/brine/paper stock/hydrocarbon etc.

SPECIFICATIONS

	STANDARD	OPTIONAL
Liquid temperature	Below 80°C(176°F)	81~120°C(177~248°F)
Shaft seal	Gland packing	Mech. seal
Direction of rotation	CW(viewed from driver)	CCW
Flange	JIS 10K /JIS 20K	Any standard
Suc./Disch. direction	Side-side	Other direction such as bottom suction
Drive method	Motor direct drive	Diesel engine drive, Turbine drive through gear, etc.
Accessories	Common base, foundation bolts, shaft coupling, air vent piping, self sealing water piping, drain piping	Pump base, pressure gauge, compound gauge, vacuum gauge, priming detector, solenoid valve for priming line, pressure switch, bearing thermometer, bearing dial thermometer with an alarm contact, tools, companion flange, etc.

(NOTE) Other specifications can be available, if required.

MATERIALS (Typical material combinations)

	Fresh water/River water/Industries	Sea water	Hydrocarbon
Casing	Cast Iron	Low Alloy Cast Iron/ Ni-resist D2/ 316S.S.	Cast Steel
Impeller	Cast Iron/Bronze/304S.S.	316S.S.	410S.S.
Shaft	Carbon Steel/4140 Steel	316S.S.	Carbon Steel/4140 Steel
Packing sleeve	304S.S.	316S.S.	420S.S.
Casing ring	Cast Iron/Bronze/304S.S.	316S.S.	403S.S.

(NOTE)
- Other materials such as Nickel aluminium bronze, Duplex stainless steel, Monel, Alloy 20, etc. can also be applied.
- Selection of material requires careful study of the properties of the liquid handled and of the operating conditions, etc. For specific details, please consult our factory.

SELECTION CHART 50Hz

High speed

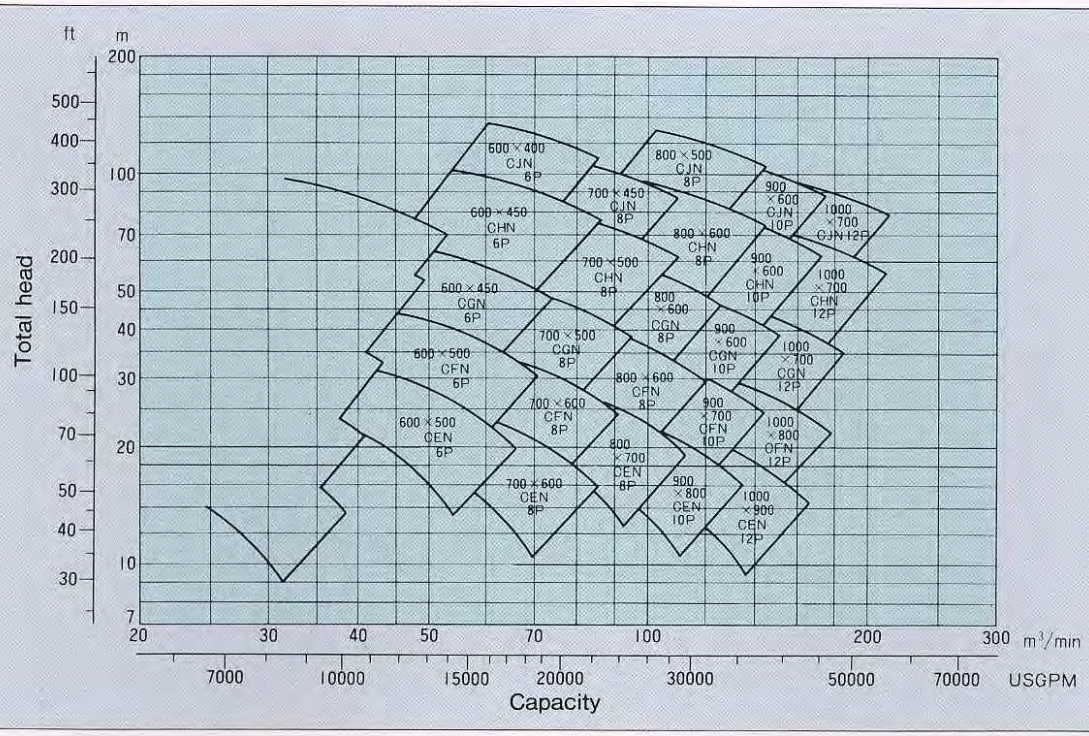

Low speed

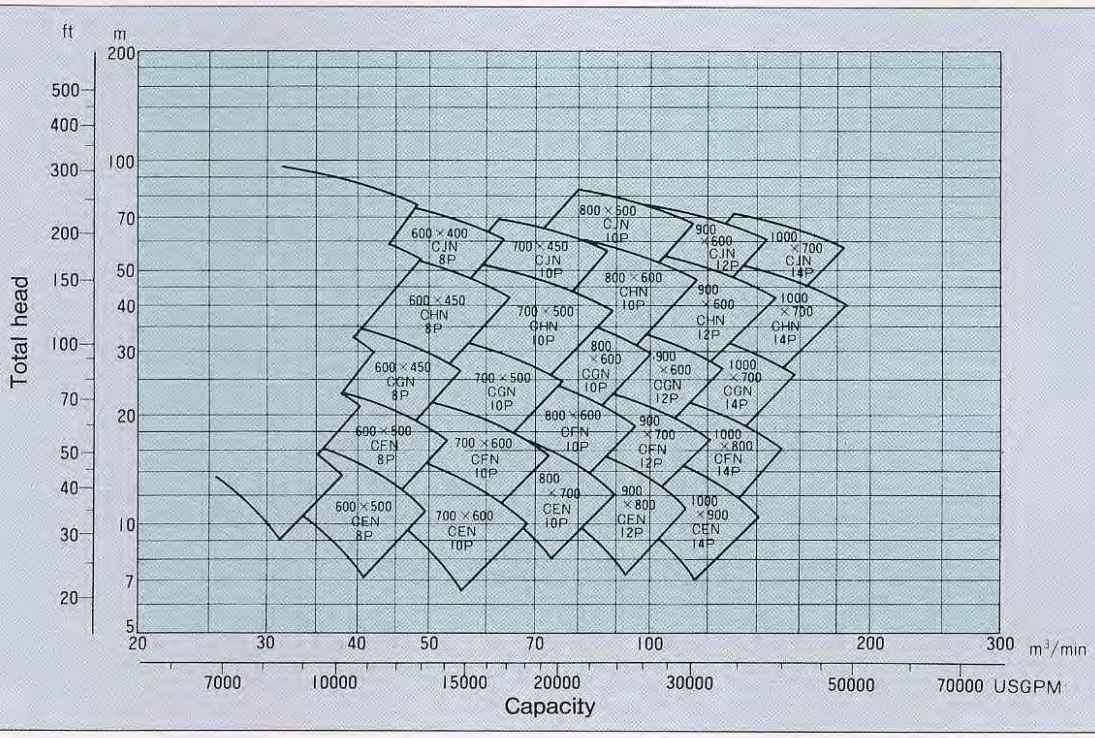

Pump Speed (50 Hz)

Motor Pole	6P	8P	10P	12P	14P
Speed (min-1)	990	740	593	493	423

(NOTE) ○ For pumps with bores of ϕ200~500 mm (8~20 in), other catalog is prepared. Please consult our factory, if required.
○ Pump rating not in the chart are also available.

60Hz

High speed

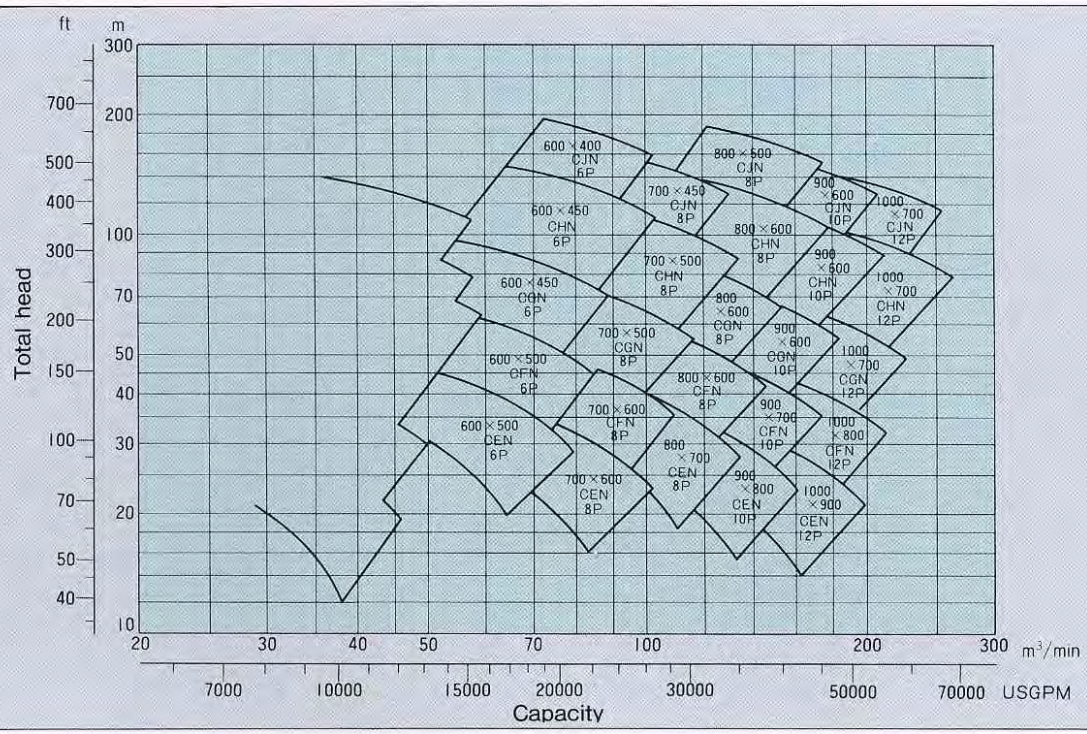

Low speed

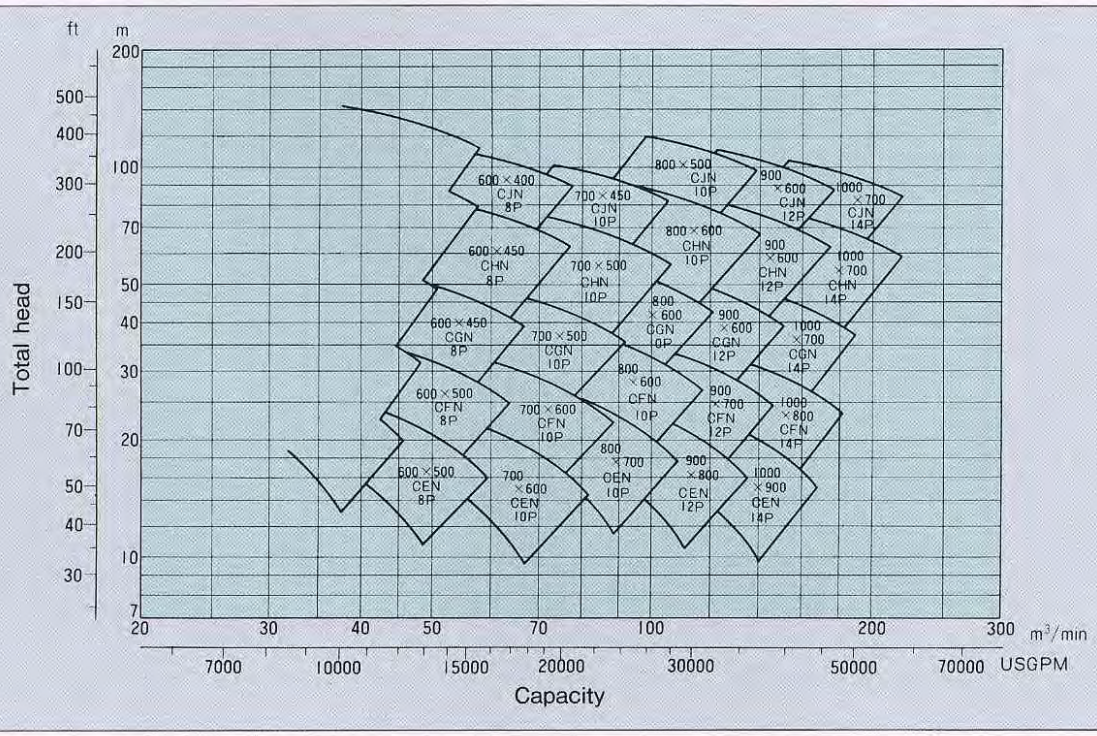

Pump Speed (60Hz)

Motor Pole	6P	8P	10P	12P	14P
Speed (min-1)	1190	890	710	593	507

CONSTRUCTION

OPTION

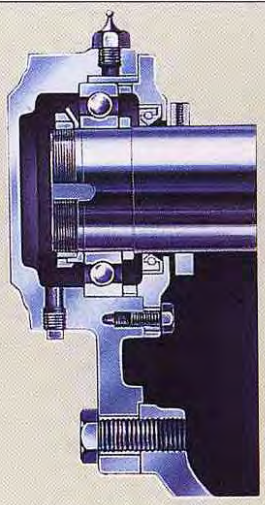

Grease lubrication

Impeller ring

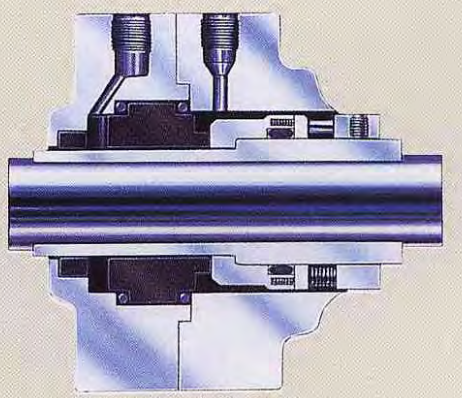

Mech. seal

OUTLINE DIMENSIONS

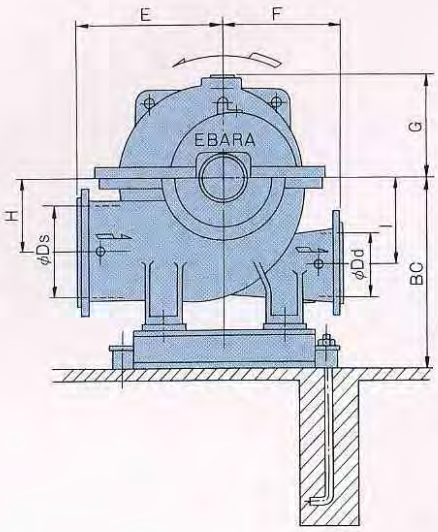

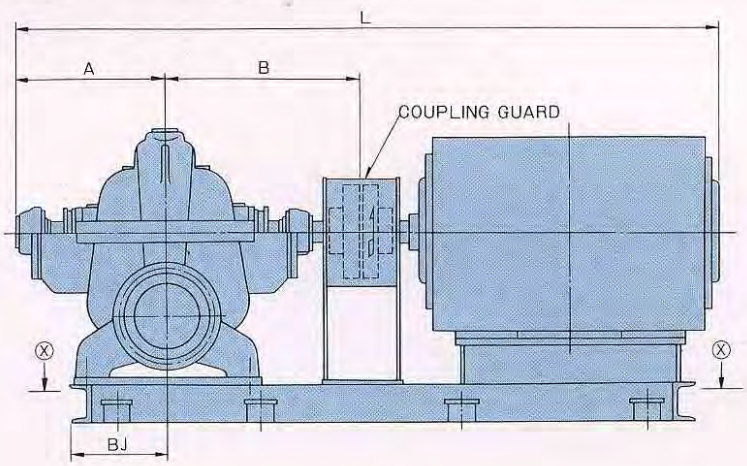

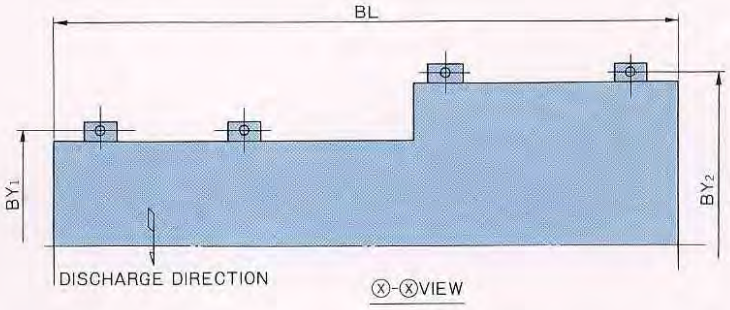

UNIT : mm

Model	Ds	Dd	A	B	E	F	G	H	I	L	BC	BL	BY_1	BY_2	BJ
600×500CEN	600	500	798	975	900	650	600	500	545	3150	1155	3000	1130	—	570
600×500CFN	600	500	820	1030	900	650	605	500	530	3500	1155	3300	1130	—	570
600×450CGN	600	450	821	1030	900	650	635	475	560	3700	1130	3500	1130	—	570
600×450CHN	600	450	907	1120	1050	750	710	500	630	4100	1230	3850	1230	—	570
600×400CJN	600	400	924	1180	1050	830	810	650	750	4600	1350	4300	1330	—	570
700×600CEN	700	600	890	1090	1000	750	715	600	630	3650	1290	3400	1230	—	620
700×600CFN	700	600	916	1120	1000	750	715	600	630	3900	1290	3600	1230	—	620
700×500CGN	700	500	982	1220	1000	750	750	580	670	4100	1290	3800	1230	—	620
700×500CHN	700	500	1039	1280	1200	850	845	600	750	4600	1380	4250	1330	—	620
700×450CJN	700	450	1045	1320	1200	970	960	775	900	4850	1565	4550	1540	—	620
800×700CEN	800	700	961	1150	1120	850	780	650	710	3950	1410	3750	1330	—	720
800×600CFN	800	600	1047	1280	1120	850	785	650	690	4300	1410	4000	1330	—	720
800×600CGN	800	600	1044	1280	1120	850	820	630	730	4650	1410	4400	1330	—	720
800×600CHN	800	600	1085	1360	1320	920	925	630	825	4850	1605	4550	1540	—	720
800×500CJN	800	500	1127	1450	1320	1050	1060	850	1000	5950	1735	5650	1740	—	720
900×800CEN	900	800	1122	1360	1250	950	885	750	800	4450	1605	4200	1540	—	820
900×700CFN	900	700	1169	1400	1250	950	890	750	775	4650	1605	4350	1540	—	820
900×600CGN	900	600	1150	1400	1250	950	935	730	850	4950	1605	4650	1540	—	820
900×600CHN	900	600	1217	1500	1500	1050	1050	730	950	6050	1735	5800	1740	—	820
900×600CJN	900	600	1245	1550	1500	1200	1200	975	1150	6250	1935	5900	1940	2340	820
1000×900CEN	1000	900	1269	1500	1450	1100	1000	850	925	4800	1785	4500	1740	—	870
1000×800CFN	1000	800	1280	1550	1450	1100	1010	850	900	5150	1785	4800	1740	—	870
1000×700CGN	1000	700	1267	1550	1450	1100	1060	825	950	5200	1785	4850	1740	—	870
1000×700CHN	1000	700	1335	1650	1700	1150	1190	825	1090	6300	1885	6000	1940	—	870
1000×700CJN	1000	700	1380	1750	1700	1350	1360	1120	1280	6600	2085	6200	2140	—	870

(NOTES) ● Dimensions L and BL may differ depending on motor type and output.
● Dimensions are approximate and not to be used for construction purposes.

EBARA CORPORATION

Head Office:
11-1, Haneda Asahi-cho, Ohta-ku,
Tokyo, 144-8510 Japan
Phone: Tokyo 3743-6111
Cable: EBARAMAIN TOKYO
Int'l Telex: J22988 EBARA TYO
Fax: Tokyo 3745-3356

Sales headquarter:
NISSAY AROMA SQUARE, 5-37-1, Kamata,
Ohta-ku, Tokyo, 144-8721 Japan
Phone: 81-3-5714-6111
Fax: 81-3-5714-6081

Please send your enquiries to the above International Division

○: Liaison Offices

■AMERICA

UNITED STATES OF AMERICA
Ebara America Corporation (Milpitas)
Ebara International Corporation (Sparks)
Airvac Inc. (Rochester)
Ebara Technologies Incorporated (Sacramento)
Ebara Solar, Inc. (Large, PA)

BRAZIL
Ebara Indústrias Mecánicas e Comércio Ltda. (Sáo Paulo)

■EUROPE

ITALY
○Italia Office (Vicenza)
Ebara Pumps Europe S.p.A. (Vicenza)

SPAIN
Ebara Espana Bombas S.A. (Madrid)

GERMANY
Ebara Germany GmbH (Hanau)

■ASIA

KOREA
Ebara Precision Machinery Korea Inc. (Seoul)
Hyosung-Ebara Company Limited (Seoul)
Hyosung-Ebara Environment Engineering Co., Ltd. (seoul)

PEOPLE'S REPUBRIC OF CHINA
○Beijing Office (Beijing)
Ying Kou Ebara Co., Ltd. (Ying Kou)
Ebara Qingdao Co., Ltd. (Qingdao)
Yantai Ebara Air-Conditioning Equipment Co., Ltd. (Yantai)
Shanghai Ebara Engineering and Services Co., Ltd. (Shanghai)

TAIWAN
○Taipei Office (Taipei)
Ebara Kailay Environmental Engineering Co., Ltd. (Taipei)
Ebara Precision Machinery Taiwan Incorporated (Taipei)
Ebara Densan Taiwan Manufacturing Co., Ltd. (Tao Yuen Hsien)
Ebara-Elliott Service (Taiwan) Co., Ltd. (Taichung)

PHILIPPINES
○Manila Branch Office (Manila)
Ebara Benguet, Inc. (Laguna)

THAILAND
○Bangkok Office (Bangkok)
Ebara (Thailand) Limited (Bangkok)

SINGAPORE
○Singapore Office (Singapore)
Ebara Engineering Singapore Pte, Ltd. (Singapore)

INDONESIA
○Jakarta Office (Jakarta)
P.T. Ebara Indonesia (Jawa Barat)
P.T. Ebara Prima Indonesia (Jawa Barat)

INDIA
Kirloskar Ebara Pumps Limited (Pune)

VIETNAM
Ebara Hai Duong Company Ltd. (Hai Hung)

United Arad Emirates
○Middle East Branch Office (Dubai)

All specifications are subject to change without notice
©EBARA CORP. 2002 Printed in Japan

Printed on recycled paper

0527②JB-F(AA)Da